WH-G405TF	
Title	Index
Size: A	Document Number: Gallite Schemaitc
Rev: 1.0	
Date: Monday, April 22, 2013	Sheet 1 of 6

POWER

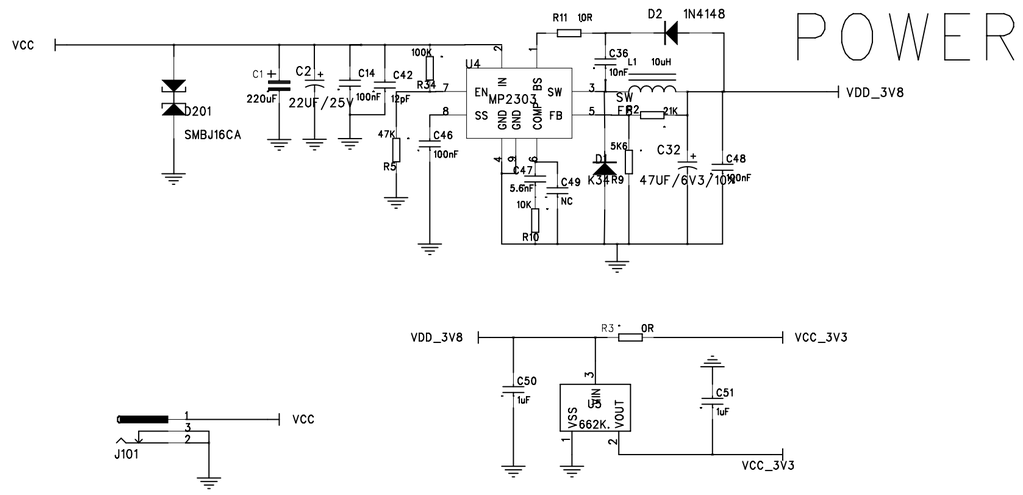

EAR

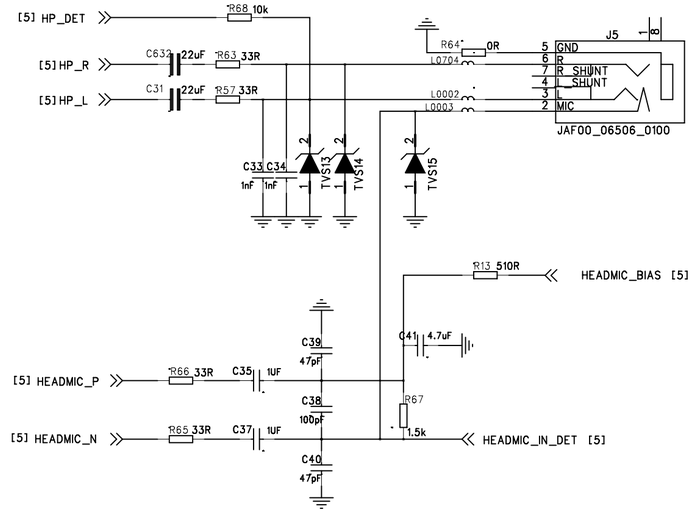

KEY

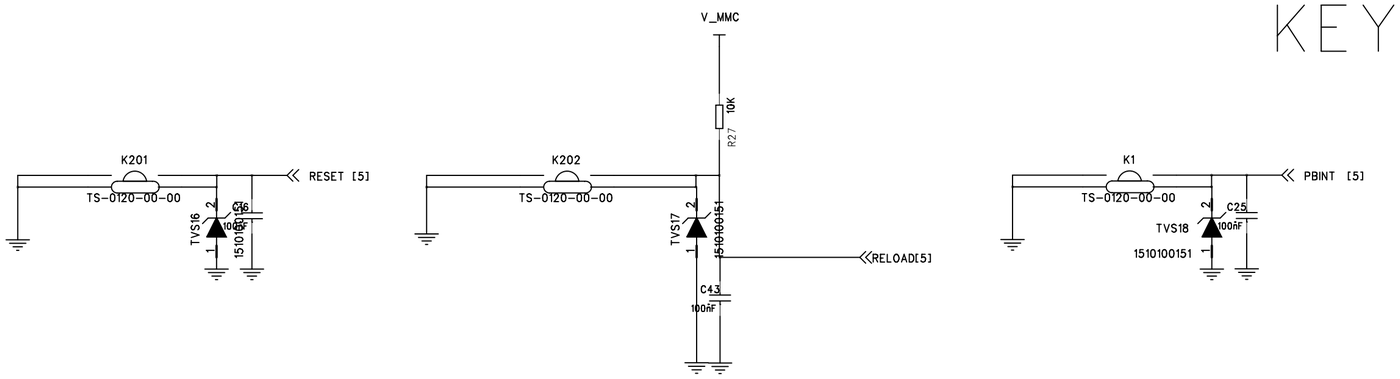

SIM

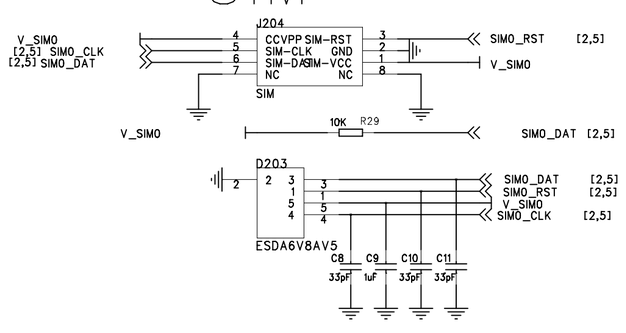

ANT

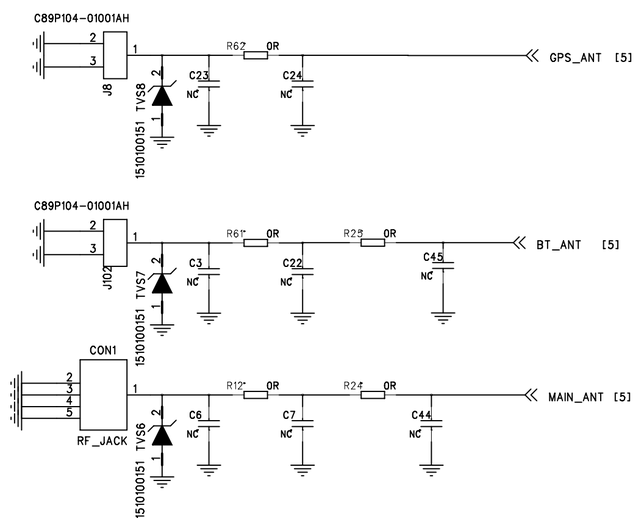

SPK

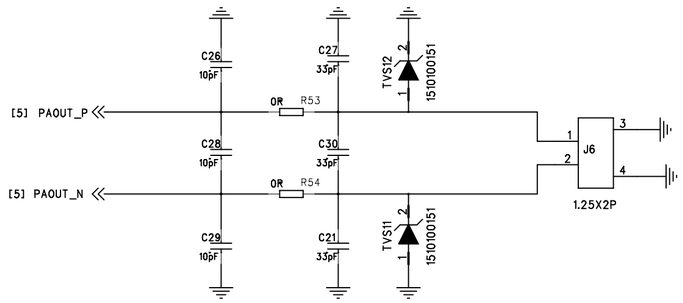

MIC

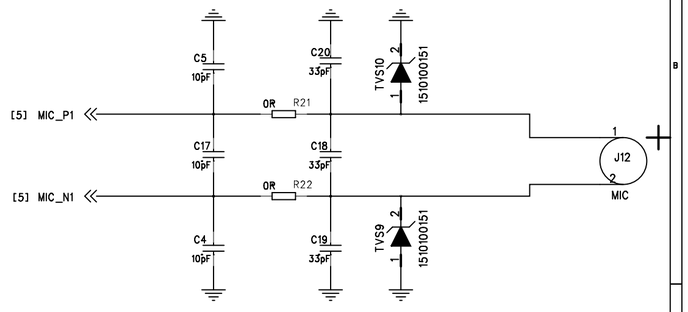

RDA Microelectronics Inc.		
Title: Gallite BB		
Size: C	Document Number: Gallite Schemaitc	Rev: 1.0
Date: Monday, April 22, 2013	Sheet 2 of 6	

AT UART

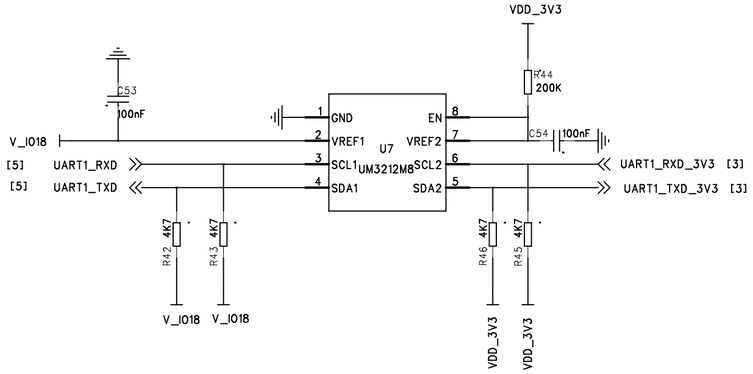

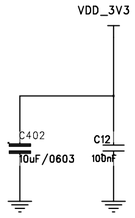

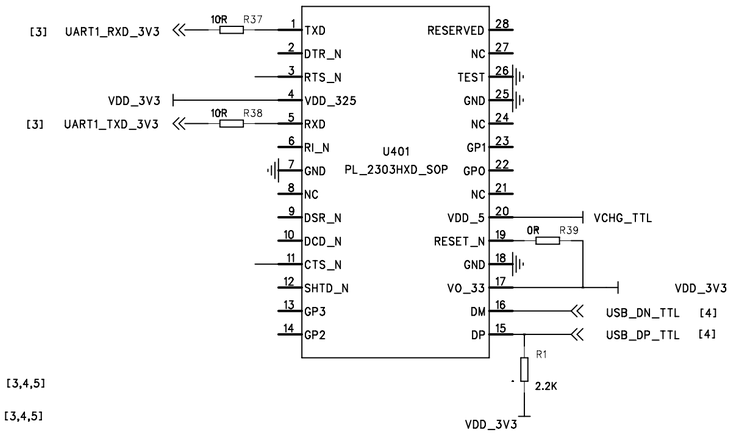

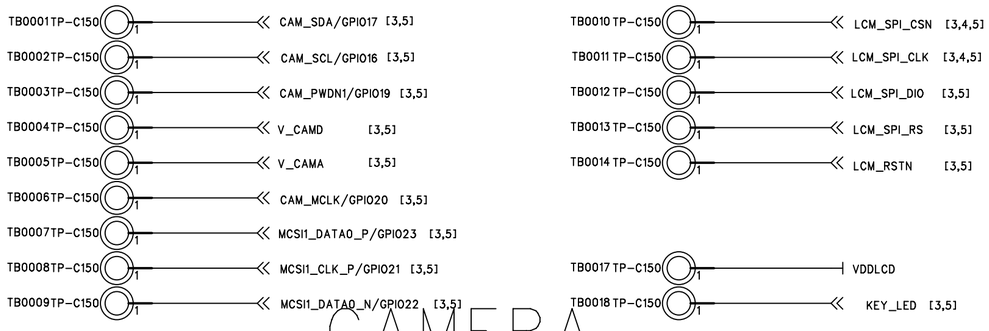

CAMERA

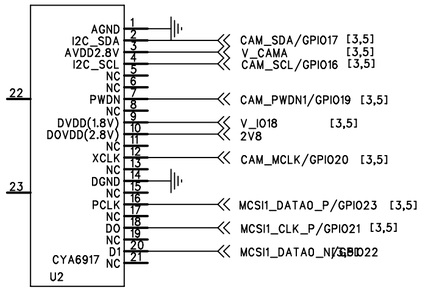

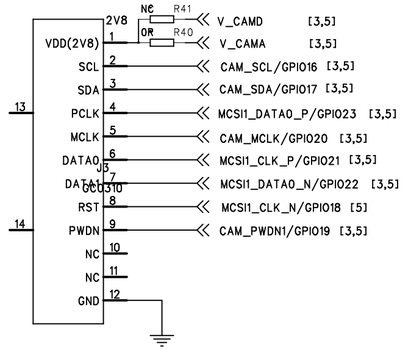

LCD

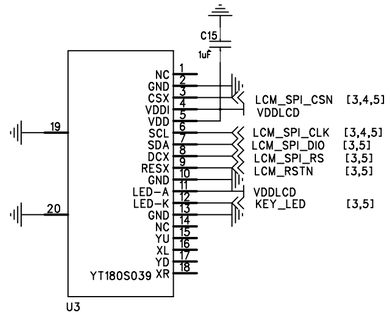

RDA Microelectronics Inc.		
Title: Gallite AB & SIM Card		
Size: C	Document Number: Gallite Schemaitc	Rev: 1.0
Date: Monday, April 22, 2013	Sheet 3 of 6	

USB

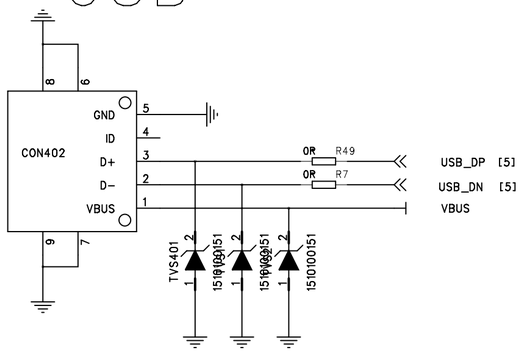

LED

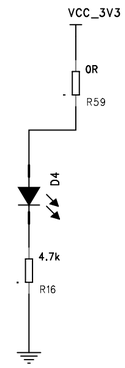

USB TO TTL

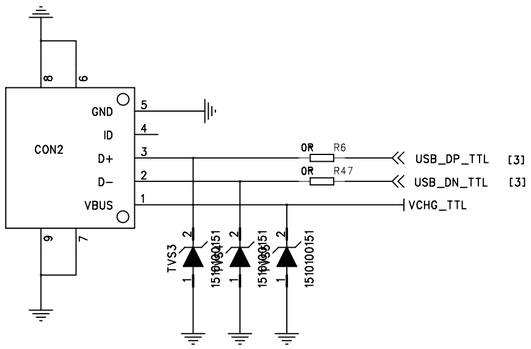

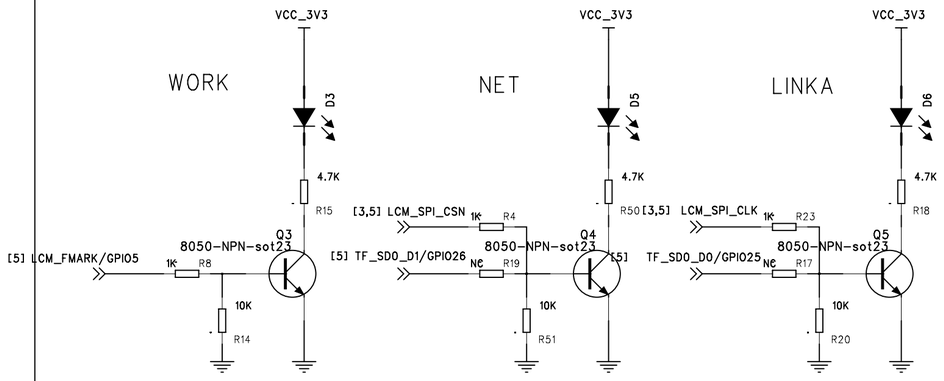

RDA Microelectronics Inc.		
Title: RF RDA6625		
Size: B	Document Number: Gallite Schemaitc	Rev: 1.0
Date: Monday, April 22, 2013	Sheet 4 of 6	

Ext interface

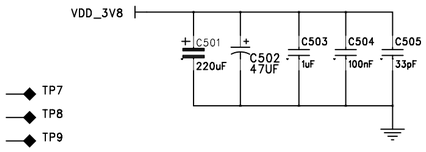

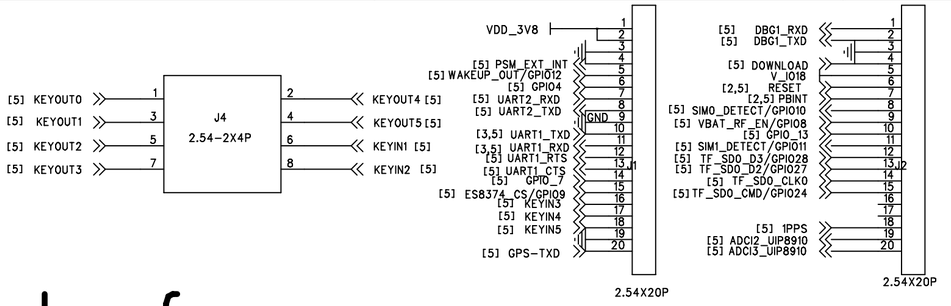

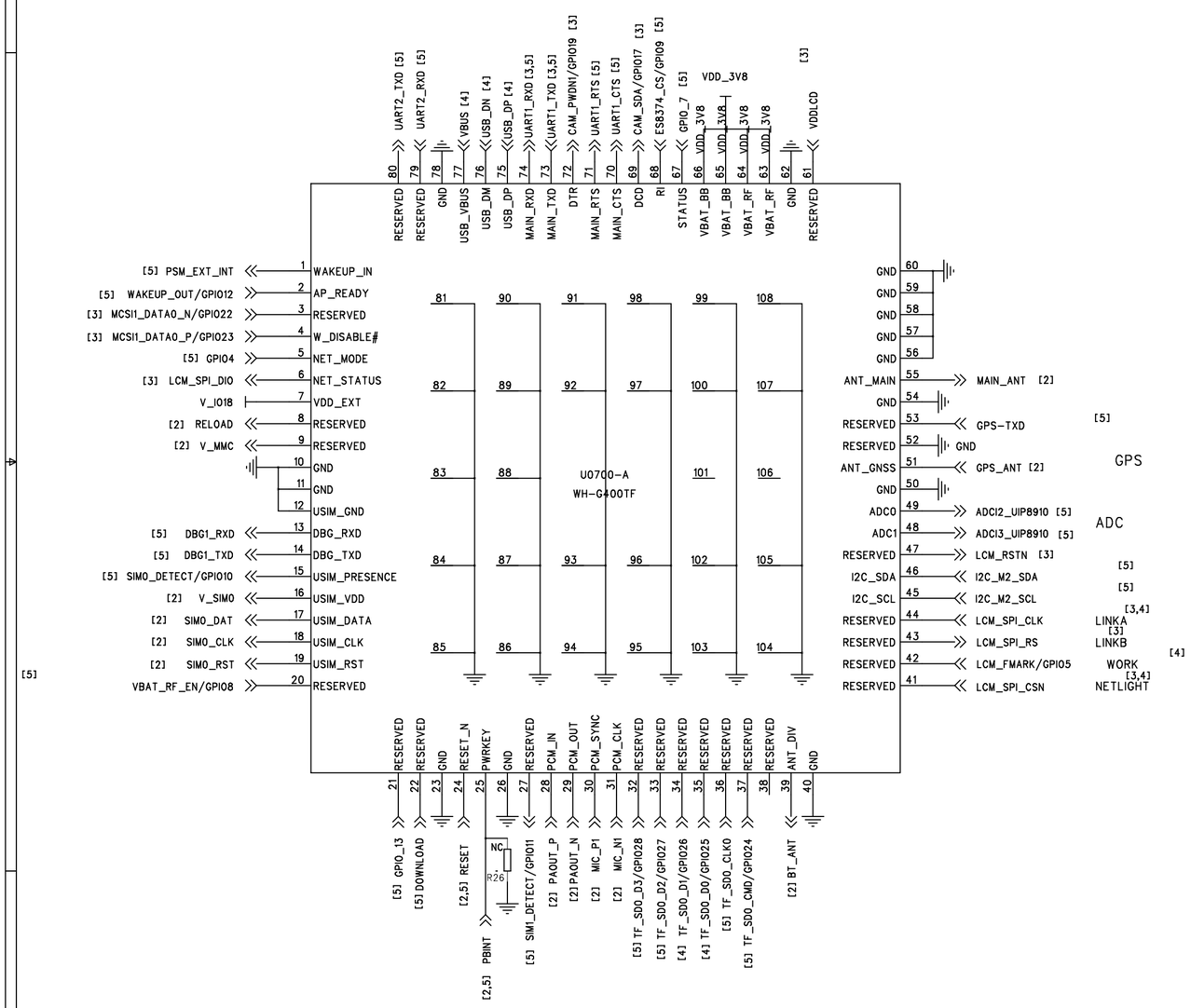

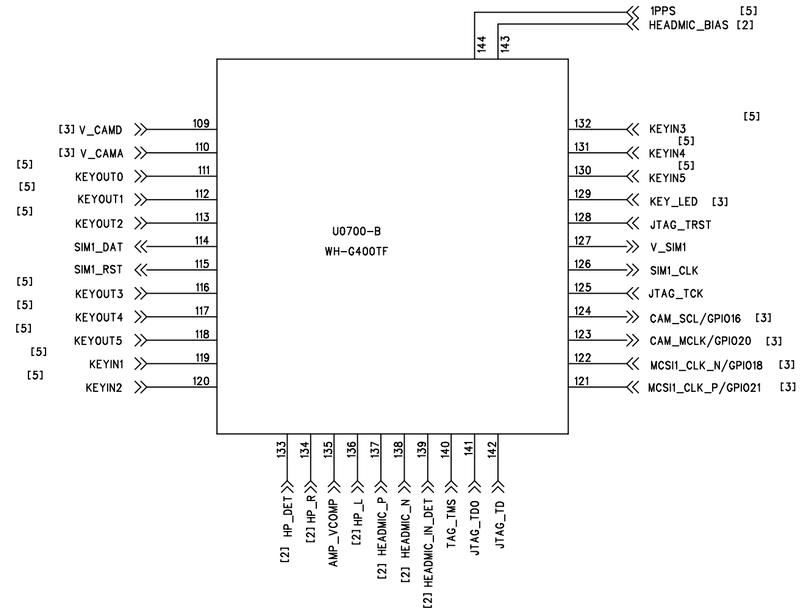

RDA Microelectronics Inc.		
Title: Gallite AB & SIM Card		
Size: C	Document Number: Gallite Schemaitc	Rev: 1.0
Date: Monday, April 22, 2013	Sheet 3 of 6	